AIR LIFT 1000 by AIR LIFT

MN-445
(02210)
ECN4015

Please read these instructions completely before proceeding with the installation.

Hardware Identification

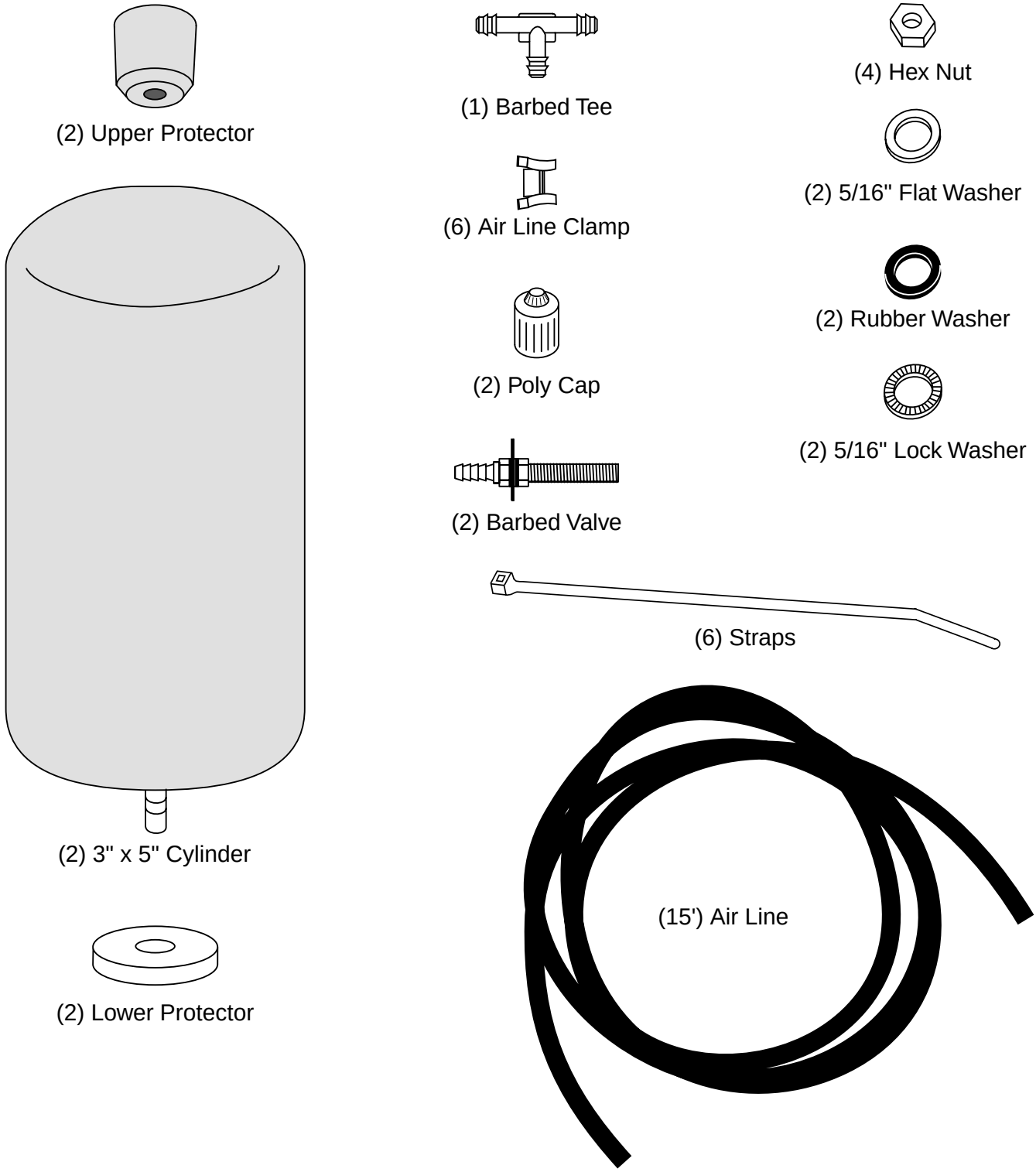

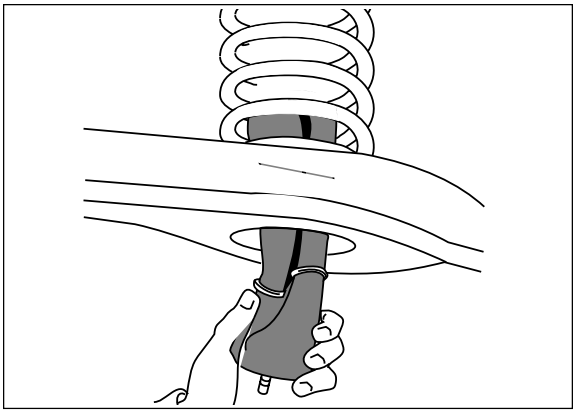

Figure 1

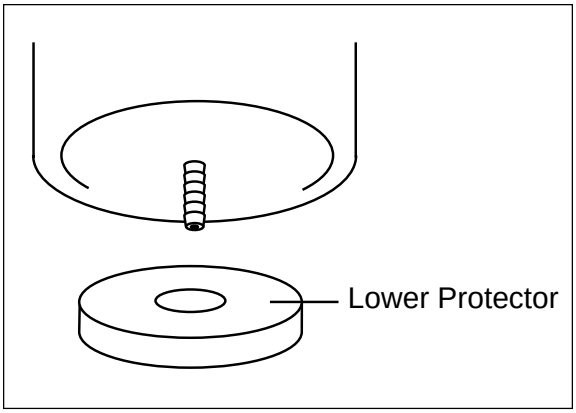

Figure 2

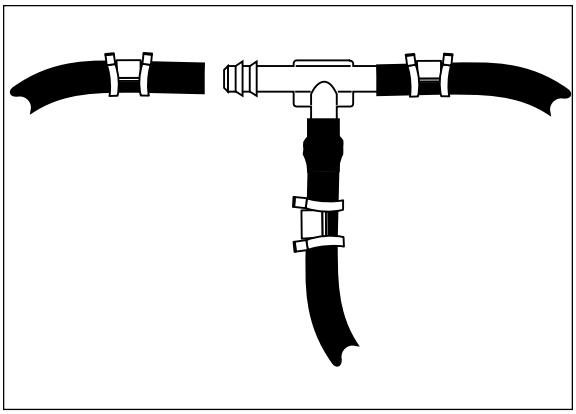

Figure 3

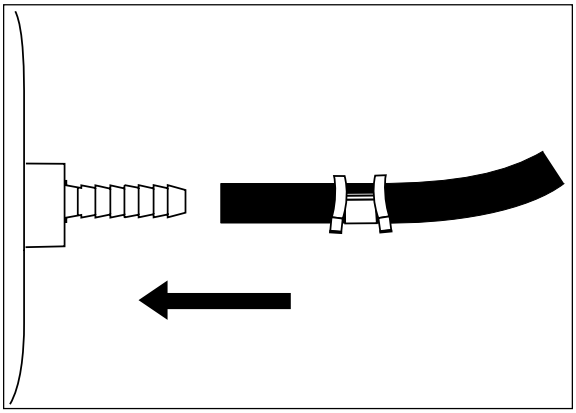

Figure 4

I. Installing the Air Cylinder

1. Jack up rear of vehicle or raise on hoist. Support frame with safety stands. Lower axle or raise body of vehicle until suspension is fully extended.

2. With the tapered end of the upper protector down, insert it up through the bottom of the A-arm to the upper spring seat bolt Push the protector over the bolt so that the protector stays in place.

   NOTE: It may be helpful to use a screwdriver to pry the protector into place.

3. Remove plastic cap from barbed stem on end of cylinder. Exhaust the air from the cylinder by rolling it up toward barbed stem. Replace cap on stem to hold flat shape. Form cylinder into a “hot dog bun” shape. If necessary, use a string, tape, or wire to retain shape (Figure 1).

3. Insert formed air cylinder into lower coil spring seat opening with stem at the bottom (Figure 1).

4. Push the cylinder up within the coil by hand or with a blunt instrument such as a spoon-type tire iron.

5. When the cylinder is completely within the coil, remove the cap and allow the cylinder to assume its “as molded” shape (remove ties or tape if used).

6. Push cylinder to the top of the coil and insert protector between the lower open coils. Push the cylinder down so that the barb goes into the protector’s open hole (Figure 2).

II. Installing the Air Line

Air tee line installation is recommended unless weight in vehicle varies from one side to the other and unequal pressures are needed to level the load. Dual air lines are used in this case.

1. Tee Air Line routing:

   IMPORTANT: To prevent air line from melting, keep it at least 8" from the exhaust system.

   a. Locate desired tee location on the frame rail or cross member.

   b. Determine and cut adequate length of air line to reach from tee to left and right side on air cylinders. *CAUTION: Leave sufficient air line slack to prevent any strain on fitting during axle motions.*

   c. Slide air line clamp onto the air line.

   d. Push the air line over one side of the tee until all the barbs are covered. Repeat procedure for other leg of tee (Figure 3).

   e. With pliers slide the air line clamp forward until it fully covers the barbed section. Repeat for other leg of tee (Figure 3).

   f. Route along cross member and lower control to air cylinder.

   g. Insert air line through lower control arm.

h. Push the air line onto the stem of the air spring, covering all the barbs (Figure 4).

i. With pliers slide the air line clamp upward until it fully covers the barbed section.

j. Push the remaining air line over the last fitting on tee and route along frame to desired inflation valve location (Figure 5). Attach with plastic straps or wire.

k. Select a location for inflation valve in the gas cap well, the truck, rear bumper, fender flange or behind the license plate, insuring that the valve will be protected and accessible with an air hose.

l. Drill a $^{5}/_{16}$" hole for inflation valve and mount as in illustration (Figure 6). Rubber washer is for outside weather seal.

m. Slide air line clamp over the air line. Push air line onto fitting covering all barbs, with pliers slide the air line clamp forward until it fully covers the barbed section (Figure 7).

n. Raise axle or lower body until air cylinders lightly touch upper spring seat and lower spacers.

o. Check tailpipe clearance and insure that it is at least 2-3 inches from air cylinder. If necessary, loosen clamps and rotate or move to obtain additional clearance. If heat shield is provided, install it. Attach shock absorbers if removed earlier in the installation.

CAUTION: Do not inflate air cylinders before reading Inflating the Air Springs section.

p. Continue with Section III.

2. Dual Air Line routing:

IMPORTANT: To prevent air line from melting, keep it at least 8" from the exhaust system.

a. Select a location for the inflation valves in the rocker panel flange, or rear bumper, insuring that each valve will be protected and accessible with an air hose (Figure 8).

b. Determine and cut adequate length of air line to reach from valve location to left side air cylinder. *CAUTION: Leave sufficient air line slack to prevent any strain on valve stem during axle motions.*

c. Insert the air line through the lower control arm and spacer.

d. Slide air line clamp onto the cut air line.

e. Push the air line onto the stem of the air spring, covering all the barbed section (Figure 4).

f. With pliers slide the air line clamp forward until it fully covers barbed section (Figure 4).

g. Repeat process for right side.

h. Drill $^{5}/_{16}$" hole for inflating valves and mount as illustrated. Rubber washer is for outside weather seal (Figure 6).

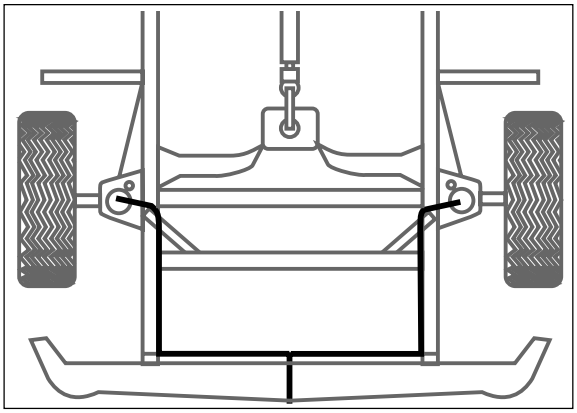

Figure 5

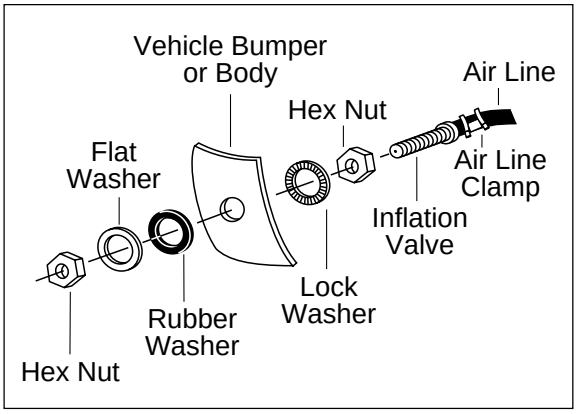

Figure 6

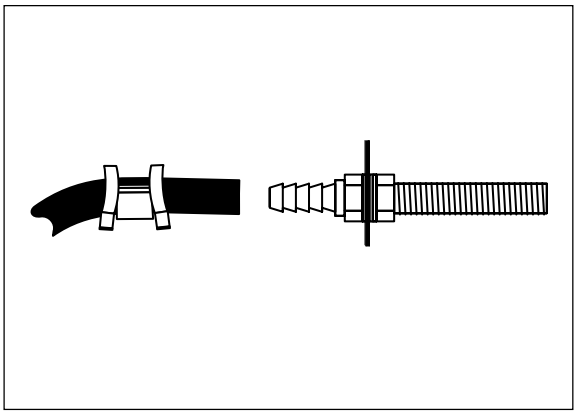

Figure 7

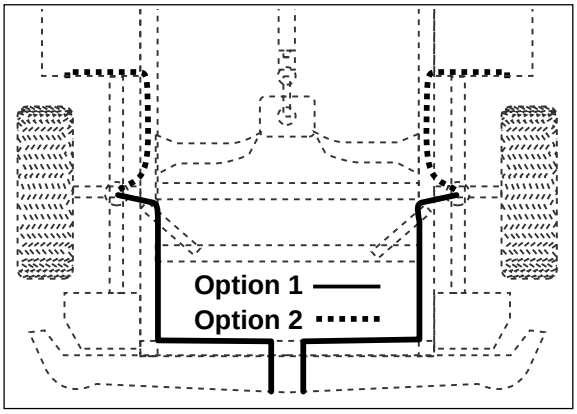

Figure 8

i. Route air line along control arm and frame to inflation valve location and cut off excess.

j. Slide a clamp onto the air line and push the air line over the fitting, covering all the barbs.

k. With pliers slide the air line clamp forward until it fully covers the barbed section.

l. Raise axle or lower body until air cylinders lightly touch upper spring seat and lower spacers.

m. Check tailpipe clearance and insure that it is at least 2-3 inches from air cylinders. If heat shields are suppled, install them.

CAUTION: Do not inflate air cylinders before reading Inflating the Air Springs section.

n. Continue with Section III

III. Testing the Air Springs

1. Inflate the cylinders to 25 lbs of air pressure. Test for air leaks by applying a liquid solution of $^{1}/_{5}$ dish soap to $^{4}/_{5}$ water to all valve cores, fittings, and connections.

2. Lower the vehicle to the ground and deflate the air springs in 5 p.s.i. intervals to determine best ride and handling.

3. Recheck air pressure after 24 hours. A 2–4 p.s.i. loss after initial installation is normal. If pressure has dropped by more than 5 lbs, then retest for leaks with the soapy water solution.

IV. Inflating the Air Springs

1. Inflate the air springs to 20 p.s.i. before adding the payload.

2. After vehicle is loaded, adjust the air pressure down to level the vehicle for ride comfort.

V. Maintenance

1. Check air pressure weekly.

2. Always maintain at least a 5 p.s.i. air pressure chafing or coil pinch.

3. If a leak develops in the system, use a soapy water solution to check all air line connections and valve cores before removing the cylinder.

Minimum Air Pressure	Maximum Air Pressure
5 p.s.i.	25 p.s.i.

Failure to maintain minimum pressure will void the warranty.

Thank you for purchasing Air Lift Products

Mailing Address:
AIR LIFT COMPANY
P.O. Box 80167
Lansing, MI 48908-0167

Street Address:
AIR LIFT COMPANY
2727 Snow Rd.
Lansing, MI 48917

Local Phone: (517) 322-2144
Fax: (517) 322-0240

For Technical Assistance call 1-800-248-0892

"The Choice of the Professional Installer"

Printed in the USA